Grillo

AGRIGARDEN MACHINES

Rotavators

the earth moves with a Grillo

The wide range of Grillo rotavators fulfills all needs in agriculture, horticulture and gardening.

The first Grillo rotavator was produced in the 60s. Since then, many other models have been produced. We are **relentlessly searching for** innovative solutions to make our rotavators **more efficient and more reliable, safer and easy-to-use**, suitable to satisfy even **the most demanding users**.

Grillo rotavators are used for tilling even **very hard and stony** soil **to a considerable depth**. As a rule of thumb, always turn the spur to the front to achieve better results and avoid putting too much effort on the user. The first run breaks the superficial crust whereas a second run allows to process the soil in depth. The tiller side discs should be removed to allow the tiller to work deeper into hard soil. Our models HR7 PRO and 11500 are especially suitable for an easy and efficient work on slopes as well.

The user can adjust **the tilling depth** by putting more or less pressure on the spur and adjusting its height. If the spur is adjusted to a higher position, the balance of the machine is shifted onwards so it will go forward easily and it will consequently not work very much into depth. On the contrary, if the spur is adjusted to a lower position, the machine will tend to work on the spot, allowing therefore a deeper tilling of the soil.

The side discs are necessary to balance the machine and to mark out the tilled area. When working on softer soil, the side discs are recommended to prevent the tilled soil from covering the new plants and damaging their roots.

On **soft soil** the side discs ensure good flotation and allow the machine to move forward easily without sinking. **If the soil is hard** or wet, it is recommended to use the tiller without side discs to allow the tines to reach deeper into the ground.

The tine holders of the models Princess MP3 PRO, HR7 PRO and 11500 have double drilling pattern to allow fitting the tines at 90° or forming a spiral.
Tines fitted at 90° are especially recommended for hard, stony, clay and wet soil to prevent the tiller from clogging. In this way the tines impact the ground firmly to break the superficial crust. **Tines fitted to form a spiral** are more effective on soft soil because they ensure a better floating of the machine and consequently allow it to move forward evenly.

High quality products and service

All Grillo products are designed and built to last, and retain their value over many years. All components, from the simplest to the most complex, are made to high standard. The frame, handlebars, tillers, transmission and gears are all built by Grillo using premium materials and cutting-edge technology. All this in order to achieve a consistent 100% quality control level. All Grillo rotavators are assembled with care in every detail and tested scrupulously by specialised personnel. Final inspection includes running the engine in order to check all its functions to ensure a further and final guarantee of a first class product. All Grillo machines are distributed and serviced by a widespread dealer network. Spare parts remain available for many years after production is discontinued.

GZ 120 - GZ 123 - GZ 220 - GZ 223

The Grillo GZ 120 - GZ 123 and GZ 220 - GZ 223 range of rotavators are simple, reliable and safe to use, delivering excellent results even in hard ground.
They are compact and well-balanced, and are capable of tilling into corners and narrow areas. Both the GZ 120 and GZ 220 have a 57 cm wide tiller, whilst the GZ 123 and GZ 223 are equipped with an 80 cm wide tiller. Their tines are made of specially tempered steel and can easily be replaced when worn. The tines continue to rotate even when the rotavator is not moving forward, allowing to easily move the GZ 120 - GZ 123 into reverse without too much effort.
The GZ 220-GZ 223 are equipped with reverse gear, which is activated by a lever on the handlebar.

The height and side position of the **handlebar** can be adjusted via levers without loosening screws or turning knobs.

Active coupling.
When the user releases the clutch lever, the tiller rotation stops immediately while the engine keeps on running.
Maximum safety and practicality.

GZ 223

The **reverse gear** lever of both the GZ 220 and GZ 223 is located on the handlebar.

The engine supplies the required torque already at 2400 rpm and the user can till the soil slowly at 80-90 rpm. or fast up to 155 rpm.
The GZ 120 and GZ 220 are fitted with 120 cc - 2.7 HP **petrol engine** with the new "Ready Start" device.
The GZ 123 and GZ 223 are fitted with 166 cc - 4.8 HP **petrol engine.**

The Gearbox in oil-bath with single speed and the case is made of aluminium to ensure maximum solidity and duration.

The new hub design allows the axle oil seal change without needing to remove the transmission.

The **front bumper** fully protects the engine against accidental knocks and can be used as a grab bar when it is necessary to lift the machine.

Mudguards are made out of a single steel mould and are therefore very robust.

A furrower can be fitted in place of the spur and delivers exceptional results.

GZ 223

The front transfer wheel is equipped with a spring device that blocks it automatically into the working position or into the transfer position.

The GZ 120 and GZ 220 have a standard **tiller** composed of 4 banks of tines 57 cm wide with side discs. It's possible to shorten it to 35 cm (2 banks).
The GZ 123 and GZ 223 are delivered as standard with an extension kit giving 6 banks of tines.
Maximum tilling depth is 28 cm. All tines are manufactured from special tempered steel and are held securely in place with bolts.

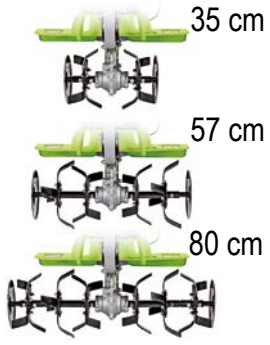

The Grillo GZ rotavators are compact and are especially suitable for use in confined areas.

GZ 123

The handlebar can be folded without the use of tools making the rotavator **easy to transport** thanks to its compact dimensions and low weight.

The handlebar can be adjusted into a lower position making it easier to push the machine on its **front transfer wheel.**

PRINCESS M1-MR-MP3

"Working with a rotavator second to none is highly satisfactory!"

Grillo rotavators Princess M1, Princess MR and Princess MP3 are reliable, safe and well-balanced. These models all have a belt-to-chain transmission: the M1 model has a single speed, the MR model has one forward and one reverse gear while the MP3 model has two forward gears plus one reverse gear. The tiller is 83 cm wide and is composed of six tine-holders with side discs. It is possible to quickly remove two or four tine-holders to narrow the tilling width. The tempered-steel hoes can be easily dismounted.

The height and side position of the **handlebar** can be adjusted via levers without loosening screws or turning knobs. It is therefore easier to work between plants and avoid branches or obstacles.

The rotavator Princess **MP3** can be equipped with the plough kit which contains a furrow plough, a pair of wheels and wheel weights.

The front transfer wheel is equipped with a spring device that blocks it automatically into the working position or into the transfer position.

Active coupling.
When the user releases the clutch lever, the tiller rotation stops immediately while the engine keeps on running.
Maximum safety and practicality.

The petrol engines available are with oil bath filter.

The rotavators Princess M1-MR-MP3 are delivered as standard with **two** different spurs.

One is suitable for soft and sandy soil, whereas the other one is for hard soil.

The height of the **spur** can be adjusted and the spur itself could be fixed or swinging to keep the rotavator well-balanced on every kind of soil.
Furthermore, the spur guides the rotavator working around plants when it is set to the swinging position.

The **furrower** can be fitted in place of the spur and deliver exceptional results.

The tiller has a width of 83 cm and can till the ground up to 32 cm depth. It is composed of six tine-holders plus side discs and is tightly fixed to the tiller axle via M10 bolts.
The tines are made of tempered steel.

The **transmission gearbox** is assembled with bolts to allow servicing.

The rotavator Princess MR has one forward speed and one reverse speed. To engage the reverse speed simply press the lever located on the left side of the handlebar.

The rotavator Princess MP3 has two forward speeds and one reverse speed. The gearbox is mechanical with oil-bath gears and the gear lever is at your fingertips.

The handlebar can be folded on all Princess models. These rotavators are **easy to be transported** thanks to their compact dimensions.

"...heavy-duty, effective, manoeuvrable and built to last."

PRINCESS MP3 PRO

The Grillo rotavator Princess MP3 PRO brings together the advantages and the manoeuvrability of the machines with a belt-to-chain transmission and the efficiency and robustness of the tiller with hexagonal shaft of professional rotavators.
The oil-bath mechanical gearbox has 2 forward gears and one reverse gear.
The standard tiller is 97 cm wide and it is composed of 6 tine elements with side discs and 27 mm hexagonal shaft.
The tines are 32 cm diameter. They are made of tempered steel and can be removed.

The Princess MP3 PRO has **2 forward speeds and one reverse speed.**
The gear box is mechanical with oil-bath gears.
The gears lever is at your fingertips. The first gear is used to break the hard superficial crust whereas a deeper soil processing is achieved with the second gear.

Active coupling.
When the user releases the clutch lever, the tiller rotation stops immediately while the engine keeps on running.
Maximum safety and practicality.

The **handlebar** is adjustable sideways and in height with easy-to-use levers, without need of special tools.

The petrol engines available are with oil bath filter.

The front transfer wheel is equipped with a spring device that blocks it automatically into the working position or into the transfer position.

The standard tiller is 97 cm wide and allows a 32 cm working depth.
It is made of 6 tines elements with side discs.
The tines, made of tempered steel, are fixed via bolts.
The tines have a 27 mm **hexagonal** shaft.

The **spur** is swinging and height-adjustable in 8 positions.

The **furrower** can be fitted in place of the spur to make perfect furrows for seeding or irrigation.

Grillo Princess rotavators are practical and **easy to transfer** thanks to their front transport wheel, supplied as a standard feature.

To obtain **a perfect finishing** and avoid walking on the tilled soil, all Grillo rotavators have a sideway adjustable handlebar.

The furrower allows to make regular **furrows** with adjustable width and depth.

HR7 PRO

“ I need an everlasting, effective and comfortable machine”.

The HR7 PRO series rotary tillers are tough and reliable.
They have an oil-bath gear transmission and an adjustable tiller including discs with a diameter of 32 cm.
They are equipped with 3 forward plus 1 reverse gears and two PTOs, one for spraying pumps and one synchronised with the gearbox.
The tiller has 6 tine holders and with the side discs is 99 cm wide. The hoe shaft is hexagonal, and the hoes aremade of hardened steel are bolted on.
It is possible with accessory extensions to have 72 cm or 125 cm tiller widths. The rotary tillers have a transfer wheel and a sturdy bumper as standard.

The handlebar is adjustable sideways and in height with easy-to-use levers. This facilitates working between plants and avoiding branches or obstacles.

Active coupling.
When the user releases the clutch lever, the tiller rotation stops immediately while the engine keeps on running.
Maximum safety and practicality.

HR7 PRO is a series of rotary tillers available with 6 HP **petrol engines** (HR75 PRO) and 9.3 HP **petrol engines** (HR76 PRO) and with 5.3 HP **diesel engines** (HR77 PRO) recoil starter and (HR78 PRO) electric starter. All engines are protected by bumpers as standard.

Electric Starter.

The machine is equipped with **2 PTOs**: the upper one runs at the engine rpm in anti-clockwise rotation and has a 11UNI 221 splined shaft; the lower one is synchronised with gearbox speed in clockwise rotation and has a 13 UNI 221 splined shaft.

HR78 PRO
HR77 PRO with recoil starter

HR75 PRO

HR76 PRO

The **spur** is swinging and height-adjustable in 8 positions.
The adjustable furrower is attached once the spur has been removed and allow to carry out furrows of different widths.

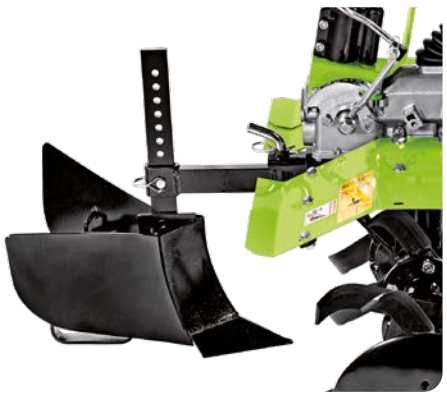

The tiller width can be increased to 72 or 125 cm fitting the extensions.

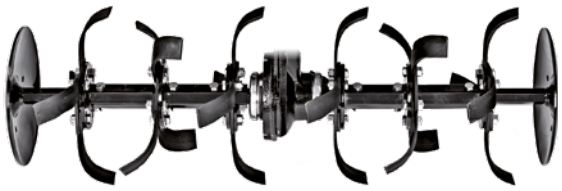

On very **hard soil** it is recommended to turn the spur to the front and to work without side discs.
A good turning radius is achieved with the help of the inclined handlebar

The adjustable furrower is an accessory that can be fitted quickly and makes furrows of different widths depending on requirements.
It can be fitted to the HR7 PRO and 11500 rotavators.

The side wheels are an optional accessory.
Extremely practical for long transfers, they are quickly assembled and driving is provided by the motion of the tiller (all Princess models, HR7 PRO and 11500).

11500

"This is my job and to do the best I can in all circumstances I need the highest performance possible..."

The Grillo 11500 is unmatched in terms of reliability and robustness.
This machine is suitable for an intense professional use thanks to its 3 speeds plus reverse speed gearbox, its powerful diesel or petrol engine up to 9.3 HP and its 34 cm diameter tiller adjustable up to 125 cm.
The machine is equipped with 2 PTOs: one for spray pumps and another one synchronised with the gearbox speed.

Active coupling.
When the user releases the clutch lever, the tiller rotation stops immediately while the engine keeps on running.
Maximum safety and practicality.

The handlebar is fitted on anti-vibration blocks, for a comfortable use.

The **handlebar** is adjustable sideways and in height with easy-to-use levers, without need of special tools.
This facilitates working between plants and avoiding branches or obstacles.

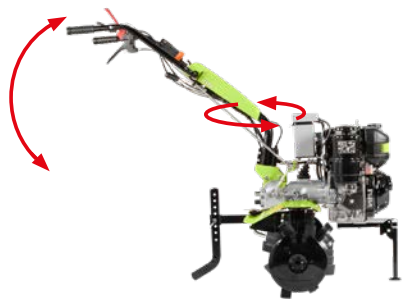

The machine is equipped with **2 PTOs**: the upper one runs at the engine rpm in anti-clockwise rotation and has a 11UNI 221 splined shaft; the lower one is synchronised with gearbox speed in clockwise rotation and has a 13 UNI 221 splined shaft.

This machine can be fitted with a 349 cc - 7.5 HP **diesel engine** (see picture) with decompressor for easy-start. Available with electric or recoil starter.
Petrol engine ranging from 270 to 302 cc - 8.4 to 9.3 HP are also available.
All engines are protected by a bumper.

The transmission with oil bath gears has three forward speeds + one reverse speed.
The tiller gear box is made of cast iron to ensure maximum solidity.

The **spur** is swinging and height-adjustable in 8 positions.

The **adjustable furrower** is attached once the spur has been removed and allow to carry out furrows of different width.

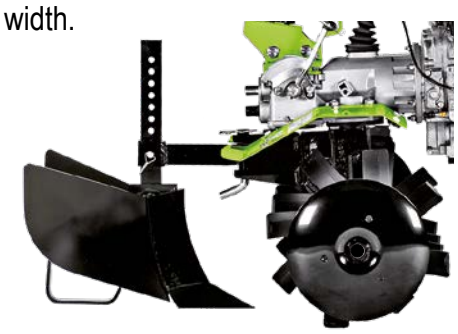

The standard **tiller** is 99 cm wide.
The tines shaft is **hexagonal** and the **enlarged** tines are made of hardened steel and fixed via bolts.

All Grillo 11500 versions have a **front support** with a spring lock device as a standard feature.

11500 series petrol engines,
with manual start from 196 cc /5.5 HP and 270 cc / 8.4 HP.

The front **transport wheel** can be lifted and it is optional on all versions 11500.
It can be locked in working or in transport position via a spring device.

Single / turn-wrest **furrow plough** and pneumatic wheels can be fitted on the Grillo HR7 PRO and 11500 rotavators.

TECHNICAL DATA

		ENGINE	POWER DISPLACEMENT CYLINDER N°	FUEL TANK CAPACITY	STARTER	GEARS SPEEDS TILLER rpm	TINES DIAMETER	TILLER WIDTH with side discs	TILLER WIDTH without side discs	WEIGHT
	GZ 120	RVM 120 RATO	HP 2.7 - kW 2 120/1	0,8 L		**1** 155 rpm	28 cm	57 cm 35 cm with tiller narrowing	52 cm 30 cm with tiller narrowing	35 kg
	GZ 123	GCV 170 HONDA	HP 4.8 - kW 3.6 166/1	0,9 L		**1** 155 rpm	28 cm	35-57-80 cm	30-52-75 cm	39 kg
	GZ 220	RVM 120 RATO	HP 2.7 - kW 2 120/1	0,8 L		**1** 155 rpm **R** 2,1 km/h	28 cm	57 cm 35 cm with tiller narrowing	52 cm 30 cm with tiller narrowing	41 kg
	GZ 223	GCV 170 HONDA	HP 4.8 - kW 3.6 166/1	0,9 L		**1** 155 rpm **R** 2,1 km/h	28 cm	35-57-80 cm	30-52-75 cm	45 kg
	Princess M1	G 200 FA LONCIN	HP 5.5 - kW 4.1 196/1	3,0 L		**1** 132 rpm	32 cm	59 - 83 cm	30 - 52 - 77 cm	62 kg
	Princess MR	G 200 FA LONCIN	HP 5.5 - kW 4.1 196/1	3,0 L		**1** 132 rpm **R** 2,3 km/h	32 cm	59 - 83 cm	30 - 52 - 77 cm	64 kg
		GX 200 HONDA	HP 5.5 - kW 4.1 196/1	3,1 L						62 kg
	Princess MP3	G 200 FA LONCIN	HP 5.5 - kW 4.1 196/1	3,0 L		**1** 36 rpm **2** 160 rpm **R** 2,3 km/h	32 cm	59 - 83 cm	30 - 52 - 77 cm	65 kg
	Princess MP3 PRO	G 200 FA LONCIN	HP 5.5 - kW 4.1 196/1	3,0 L		**1** 36 rpm **2** 160 rpm **R** 2,3 km/h	32 cm	97 cm	56 - 82 cm	68 kg
		GX 200 HONDA	HP 5.5 - kW 4.1 196/1	3,1 L						66 kg
	HR75 PRO	G 210 FA LONCIN	HP 6 - kW 4.4 212/1	3,6 L		**1** 53 rpm **2** 123 rpm **3** 162 rpm **R** 3 km/h	32 cm	72 - 99 cm 125 cmwith rotary tiller extensions	58 - 85 cm 111 cm with rotary tiller extensions	83 kg
	HR76 PRO	G 300 FA LONCIN	HP 9.3 - kW 6.8 302/1	6,1 L						95 kg
	HR77 PRO	SH178 FA NORWIK	HP 5.3 - kW 4 306/1	3,5 L						97 kg
	HR78 PRO	SH178 FA NORWIK	HP 5.3 - kW 4 306/1	3,5 L						105 kg
	11500	GX 200 HONDA	HP 5.5 - kW 4.1 196/1	3,1 L		**1** 53 rpm **2** 123 rpm **3** 162 rpm **R** 3 km/h	34 cm	72 - 99 cm 125 cm with rotary tiller extensions	59 - 86 cm 112 cm with rotary tiller extensions	82 kg
		GX 270 HONDA	HP 8.4 - kW 6.3 270/1	5,3 L						90 kg
		GX 270 HONDA	HP 8.4 - kW 6.3 270/1	5,3 L						98 kg
		KD15 350 KOHLER	HP 7.5 - kW 5.5 349/1	4,3 L						121 kg

Grillo rotavators are exclusively fitted with engines with the most suitable features for horticultural use, such as the excellent torque even at low rpm. These engines are robust, silent and incorporate the latest technical innovations ensuring reliability over a long period. They are easy-start engines with reduced fuel consumption and vibrations. For very dusty environments, GX 200, GX 270, G 200 FA, G 210 FA, SH178 FA NORWIK and KD15 350 engines have oil bath filters.

Grillo Technical Assistance
Efficient, practical pre- and after-sales service with a single goal: to always give our Customers quick, efficient answers

Guarantee and Service Spare parts

Guaranteed machines and solutions. Spare parts service with fast delivery times even for 30-year-old machines: value guaranteed over time.

GRILLO DEALERS

Specialized stores around the country are able to understand your specific needs to direct you toward the right choice.
You will be met with quality, courtesy and a chance to view and try all Grillo products.

GRILLO SpA
Via Cervese, 1701 - 47521 CESENA (Italy)
Tel. (0039) 0547 633111
e-mail: grillo@grillospa.it

www.grilloagrigarden.com
e-mail: info@grilloagrigarden.co.uk

Dealer

In his pursuing of constant development of his products, Grillo Spa reserves for himself the right to change the technical specifications and the illustrations on this document, at any given moment and without notice and without any kind of obligation. All the pictures characteristics are not contract-binding.

Cod. DP069GB ENG 2026 / 09