TRIMMER HWT

Wheeled string trimmers

Grillo
AGRIGARDEN MACHINES

GRILLO designs and builds machines with man in mind, to transform your work into pleasure.

Grillo is your guarantee of quality. The company strives for continuous improvement through innovation.
Continuous improvement results in quality and reliability and this, combined with excellent customer and spare parts service, means that Grillo machines retain their value over a long period.

Special machines to cut grass
Commercial brush-cutters with heavy duty nylon cord and large wheels, push and self-propelled.

These machines meet the needs of both private customers and contractors who work in varied situations: gardens with trees, walls and obstacles, rough areas, kerbsides and close to flowerbeds.
The design of our wheeled trimmers is fully developed in Italy at the Grillo facility, using only the highest grade material and the very latest technology to ensure quality built machines.

A Trimmer for every application!

HWT 570 Multiforce

HWT 600 WD

HWT 700 Supertrac

HWT 570

Wheeled string trimmer with tilting frame and dual PTO for attachment change over.

Multiforce

Not just a string trimmer!

The **HWT 570 Multiforce** is a handy and easy-to-drive string trimmer, suitable for trimming where standard mowers do not reach. It can also be used as a lawnmower for small, flat plots of land. The trimmer is equipped with a 166 cc (4.8 HP) 4-stroke petrol engine. The drive belt between the engine and the cutting rotor is high-strength for a long service life.
The machine is supplied as standard with a side steel grass deflector that prevents residues from being thrown onto the road or driveway.
Standard equipment includes a transparent screen to protect the engine and a rubber guard between the wheels to ensure maximum protection of the operator from grass cuttings and possible objects being thrown. The large wheels (non-drive) allow agile and manoeuvrable operation close to obstacles.

By turning the string holder upside down, the lowest settings are obtained.

In some situations, such as trimming edges or finishing near walls, it may be useful to cut close to the ground. To achieve this there is the TILT device: by operating the lever to the left of the handlebar it is possible to release the frame from the central position and tilt it to the right or left, accompanying the tilt with the handlebar. In this operating mode the rotor will perform an inclined cut. In order to achieve a cut grazing the ground, it is advisable to fit the strings in the lowest setting, with the string holder plate upside down.

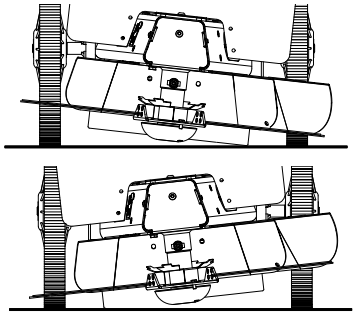

WEEDER BRUSH with steel strands - optional attachment

The 35 cm weeder brush is an attachment for the upper PTO. It is the ideal accessory for cleaning interlocking pavers, removing weeds, moss and dirt in general.

HWT 600 WD

Brush-cutter with driven wheels

The manoeuvrability and traction of the machine allows you to work in comfort and accuracy even on slopes.

The **HWT 600 WD** is a self-propelled large wheel brush-cutter, suitable for cutting in rough areas and gardens.
The manoeuvrability and traction of this machine allow you to work in comfort and accuracy even on slopes.
The machine is ideal for not only cleaning rural driveways or orchards, but also for mowing around edgings close to flowerbeds, vegetable plots or for cleaning roundabouts and kerbsides.
It can also be used as a lawnmower for small gardens and in flat areas with excellent results.

HWT 600 WD

For comfortable and precise trimming

The **HWT 600 WD** is fitted with a Honda GCV 170, 4-stroke petrol engine with oil bath gear transmission and high strength drive belt.
It's a self-propelled brush-cutter which allows comfortable working in uneven or sloping terrain.
2.5 km/h speed.

It's equipped with a comfortable handlebar and front mounted lever to engage the cutter head and a rear lever to engage the drive system.

The large rubber wheels have cleats to provide excellent grip.
The cutting height is adjustable in four positions: two fast and two simply turning upside-down the cord-attachment plate.

It comes standard with several operator's protection: a steel grass guard, a transparent plastic protection in front of the engine and a flexible rubber strip between the wheels.

A stainless-steel anti-twist disc prevents vegetation from wrapping around the cutting head.

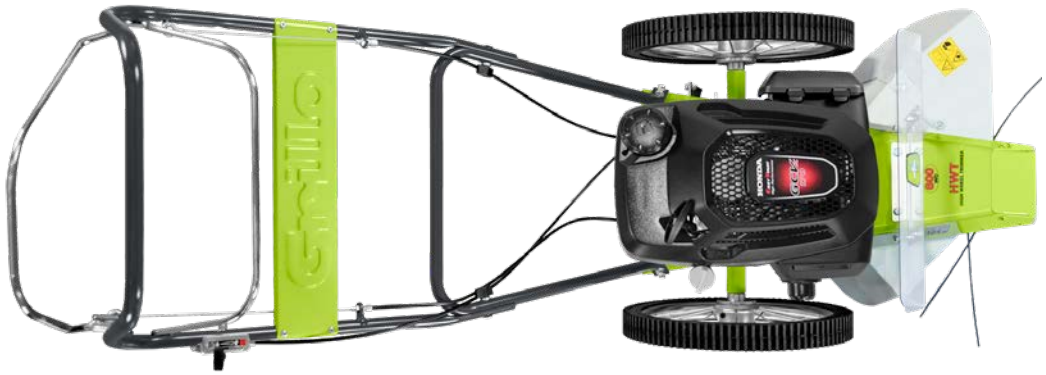

HWT 700 Supertrac

Robust with high grip on the surface

It's a robust brush-cutter, its high grip on the ground makes it easy to clean and cut in rough areas with high grass and also on steep slopes.

The **HWT 700 Supertrac** is the most performing model in the Trimmer range. It's the ideal machine for cleaning and cutting in rough areas, with high grass and in steep slopes, suited to clear undergrowth, rural driveways, vineyards and any areas that a normal mower cannot reach.
It allows you to clean kerbsides, forecourts and roundabouts.
In small areas it may be used as a normal mower.

The anti-slip toothed steel discs provide better grip on slippery ground and on steep slopes. The fitting of the discs is easy and fast and can be done on the spot by a clip pin.

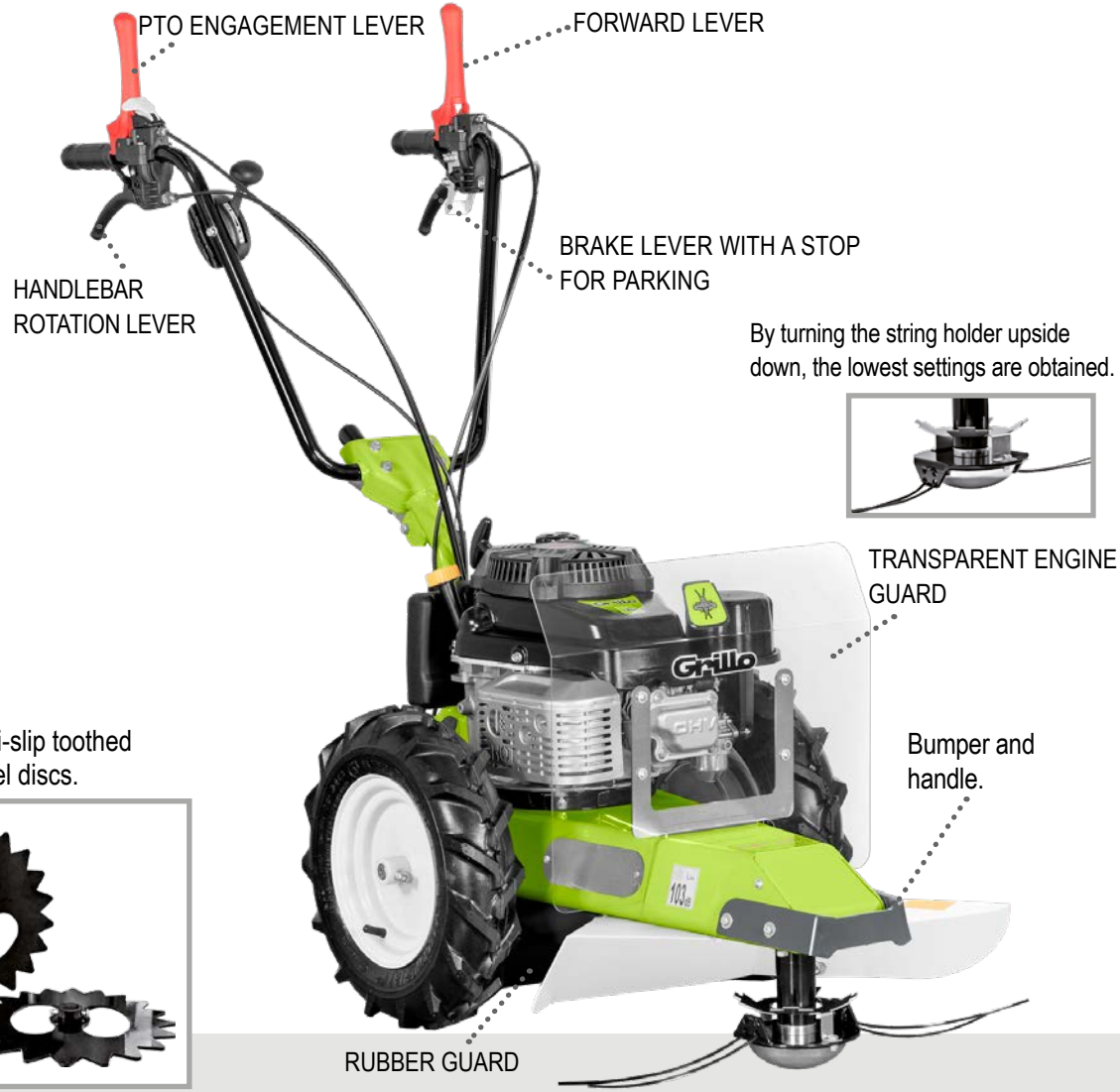

HWT 700 Supertrac

The **HWT 700 Supertrac** is fitted with a single-cylinder Kawasaki engine FJ180V KAI, OHV 170 cc, 4.5 HP, and a fuel tank with a capacity of 1.7 litres.
This engine has a double element air filter for intense professional use and an anti-grass grid to keep the engine clean.
The transmission consists of oil bath gears and high strength belts.
It has a speed of 2.5 km/h and is a self-propelled machine, able to deal with 30° maximum slopes in any inclination thanks to the forced lubrication oil pump.
The brakes on both wheels provide security and control on slopes and steep terrain.
You can leave the machine on a slope thanks to its parking brake.
The trimmer head will automatically stop when you release the controls.

For operator safety the standard equipment includes a steel grass guard, a transparent hard plastic protection in front of the engine and a flexible rubber strip between the wheels.

Stainless-steel anti-twist disc prevents vegetation from wrapping around the cutting head.

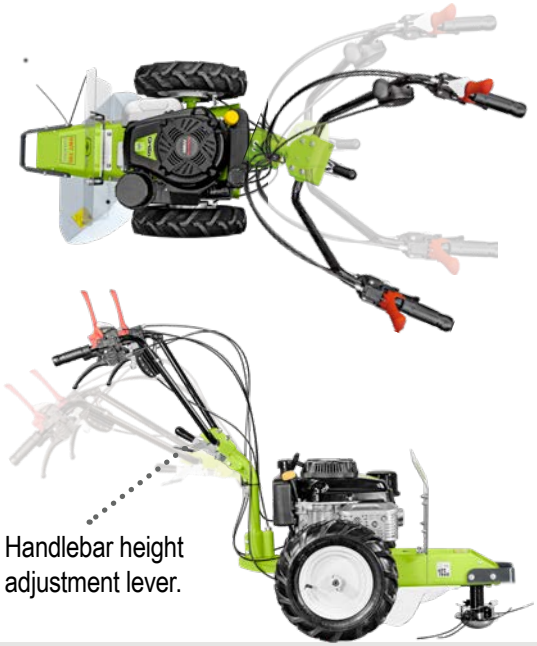

Handlebar height adjustment lever.

The agricultural style wheels ensure high grip on the ground.

The height adjustable handlebar can be moved to either the right or left, and allows excellent control of the machine and also a comfortable work position.

The handlebar, in the transport and storage position, makes the machine very compact.

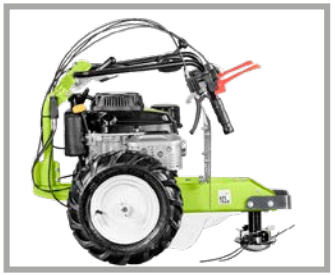

The saw blade, supplied as optional accessory, allows you to cut small trees up to 8 cm in diameter.

Thanks to the air filter snorkel kit, which keeps the air filter thoroughly clean, this machine can be used in a very dusty environment too.

The optional available blades disc kit is equipped with a protection that keeps the blade disc at a safe distance from the plant stems to prevent them from damages. Blades are made of plastic

Technical data

HWT 570 Multiforce	HWT 600 WD	HWT 700 Supertrac
ENGINE: HONDA GCV 170, OHC, 166 cc, 4.8 HP (3.6 kW) single cylinder 4 stroke petrol. **STARTER:** recoil starter. **FUEL TANK:** 0.9 litres.	**ENGINE:** HONDA GCV 170, OHC, 166 cc, 4.8 HP (3.6 kW) single cylinder 4 stroke petrol. **STARTER:** recoil starter. **FUEL TANK:** 0.9 litres.	**ENGINE:** KAWASAKI FJ 180V KAI 179 cc, 4.5 HP (3.4 kW) one-cylinder, 4-stroke, petrol, forced lubrication, equipped with oil pump. **STARTER:** recoil starter. **FUEL TANK:** 1.7 litres.
METHOD OF ADVANCEMENT: push-type **MAX. GRADIENT:** 25° any inclinations	**TRANSMISSION:** oil bath, mechanical and single-speed. **SPEED:** 2.5 km/h. **MAX GRADIENT:** 25° in any inclination.	**TRANSMISSION:** oil bath, mechanical with single-speed. **SPEED:** 2.5 km/h. **MAX GRADIENT:** 30° in any inclination.
CUTTING HEIGHT: adjustable at 1.5-3-5-6 cm. **CUTTING WIDTH:** 60 cm. STRING: 3 mm nylon square section.	**CUTTING HEIGHT:** adjustable at 1.5-3-5-6 cm. **CUTTING WIDTH:** 60 cm. STRING: 3 mm nylon square section.	**CUTTING HEIGHT:** adjustable at 1.5-3-5-6 cm. **CUTTING WIDTH:** 60 cm. STRING: 3 mm nylon square section.
HANDLEBAR: adjustable and foldable. **TILT DEVICE:** control of the cutting angle from the handlebar. **WHEELS:** 16'' diameter, non-driving. **WHEEL AXLE:** tilting.	**HANDLEBAR:** fixed. **WHEELS:** 16'' diameter, driving wheels. **WHEEL AXLE:** fixed.	**HANDLEBAR:** adjustable and foldable. **BRAKES:** service and parking brake. **WHEELS:** tractor 3.50-8, 38 cm diameter, driving wheels. **WHEEL AXLE:** fixed.
STANDARD EQUIPMENT: steel side grass deflector, transparent protection and flexible rubber guard, anti-winding disc. **ACCESSORIES:** weeder brush kit with steel strands for interlocking pavers and kerbs.	**STANDARD EQUIPMENT:** steel side grass-guard protection, transparent hard plastic protection in front of the engine, flexible rubber protection, anti-wrapping disc.	**STANDARD EQUIPMENT:** steel side grass-guard protection, transparent hard plastic protection in front of the engine, flexible rubber protection, anti-wrapping disc, automatic cutter head brake. **ACCESSORIES:** Anti-slip toothed steel discs, saw disc, blade disc kit for grass only, air filter snorkel Kit.
WHEEL TRACK: 55 cm **TOTAL LENGTH:** 145 cm **TOTAL WIDTH:** 61 cm **HEIGHT:** 105 cm **WEIGHT:** 48 kg	**WHEEL TRACK:** 55 cm **TOTAL LENGTH:** 140 cm **TOTAL WIDTH:** 60 cm **HEIGHT:** 108 cm **WEIGHT:** 47 kg	**WHEEL TRACK:** 56 cm **TOTAL LENGTH:** 147 cm **TOTAL WIDTH:** 60 cm **HEIGHT:** 105 cm **WEIGHT:** 62 kg

Beyond the product values that make Grillo machines different!

After sales service

The customer care service is aimed at giving fast and effective answers to our customers' requests.

Warranty and spare parts service A lifetime guaranteed value

High-quality components quickly available even for 30-year-old machines.

Grillo dealers

Grillo dealers will help you with quality and courtesy to make the right choice according to your needs.

GRILLO SpA
Via Cervese, 1701 - 47521 CESENA (Italy)
Tel. (0039) 0547 633111
e-mail: grillo@grillospa.it

www.grilloagrigarden.com
e-mail: info@grilloagrigarden.co.uk

Dealer

In his pursuing of constant development of his products, Grillo Spa reserves for himself the right to change the technical specifications and the illustrations on this document, at any given moment and without notice and without any kind of obligation. All the pictures characteristics are not contract-binding.

Cod. DP078GB ENG 2026/09